skanti

INSTRUCTION MANUAL

POWER PACKS
Type P400 and Type P401

PROVISIONAL INSTRUCTION MANUAL

GORM HELT-HANSEN

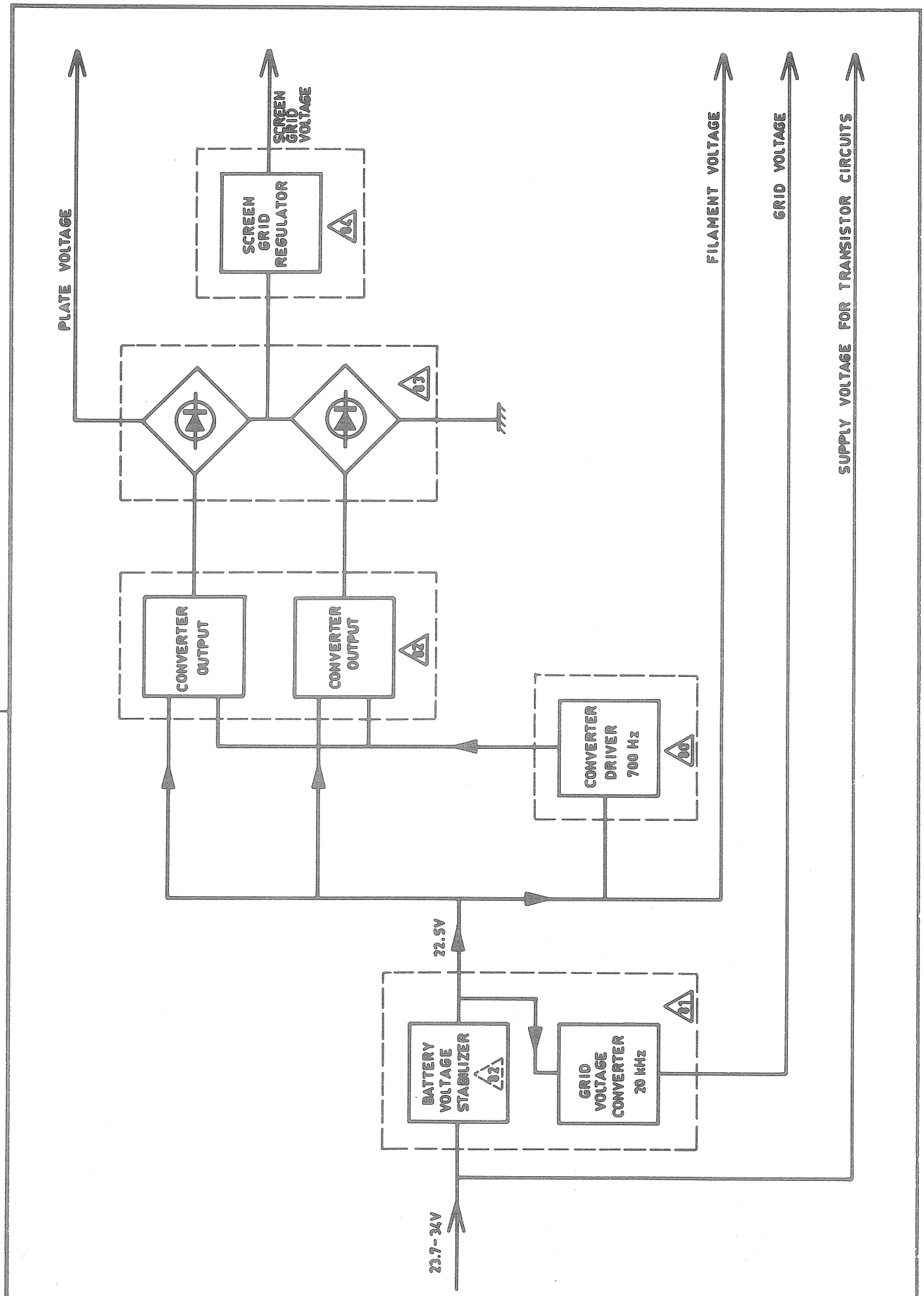

skanti

BLOCK DIAGRAM

DC POWER PACK

Tegn JD	Konf
P - 0101 - 1	
20 - 1 - 72	

P 400 P 401

INSTRUCTION MANUAL

CONTENTS

Gorm Helt-Hansen

1 INTRODUCTION

1.1. Power packs P 400 and P 401 deliver the voltages required for operation of the type T 400 transmitter.

The P 400 is used for operation from a 24 V battery whilst the P 401 is used for operation from AC mains.

The two power packs have identical physical dimensions which match the 19-inch standard, and are intended for mounting in a cabinet. The TRP 400 transmitter/receiver combination thus consists of the T 400 transmitter, R 400 receiver, and P 400 or P 401 power pack.

Because we at Skanti are constantly processing the experience gained during the production and operation of our equipment, it is possible for minor modifications to occur relative to the information given in this instruction manual. If practically possible, however, any corrections will be listed on a correction sheet at the back of the front cover off this manual.

2 TECHNICAL DESCRIPTION

2.1. Technical Data

Input Terminals	P 400	P 401
Nominal supply voltage	26.4 V DC	110 V AC 220 V AC 380 V AC or 440 V AC
Permissible voltage variation	23.7-33 V	±10%
Max. mains voltage	34 V	±30% above nominal supply voltage in 2 seconds
Max. power consumption	1000 W	1000 VA

2.1.2. Output Terminals

Anode voltage	1000-1100 V DC	1000-1100 V DC
Max. anode current	0.5 A	0.5 A
Max. ripple	20 V	27 V
Screen grid voltage	270 V DC	270 V DC
Max. screen grid current	175 mA	175 mA
Max. ripple	1 V	1 V
Filament voltage	22.5 V DC	13.6 V AC
Filament current	4 A	4 A
Supply voltage for transistor circuits	23.7-33 V DC	23.5-29 V DC
Max. current	2 A	2 A
Max. ripple	-	4 V
Negative grid bias	-47 V DC at 10 mA	-47 V DC at 10 mA

2.1.3. Fuses

	P 400	P 401	Supply Voltage
LT fuses			
Two 6.3 x 32 mm	4 A quick	2 A slow	110 V
		1 A slow	220 V
		0.8 A slow	380 V
		0.63 A slow	440 V
HT fuses			
Two 6.3 x 32 mm	40 A quick	6.3 A slow	110 V
		3.15 A slow	220 V
		2 A slow	380 V
		1.6 A slow	440 V
Fuse mounted below chassis			
One 6.3 x 32 mm	20 A quick	-	

2.1.4. Dimensions:

Height	133 mm	133 mm
Width	482 mm	482 mm
Depth in rack (inclusive of connectors)	373 mm	373 mm
Weight	16 kg	27 kg

2.2. Construction

The power packs are built in a solid corrosion-resistant angle-iron frame which is provided with a rear plate on which multi-wire connectors for the cable connections are mounted. A chassis plate mounted in the middle of the frame carries the circuit boards and those components which are not suited for mounting on printed circuit boards. A cover plate provides protection against the shock hazard and provides electrical screening against radiation.

The chassis and front panel are electrically insulated from all circuits which connect directly to the mains. The chassis may therefore be earthed without causing the mains to be earthed.

The power packs are divided into modules most of which are built on printed circuit boards. All of these are accessible when the cover plate is removed.

2.3. Circuit Description, P 400, 24 V DC Power Pack

2.3.1. Circuit Diagram P-0080 shows the complete power pack.

Dotted lines mark divisions between modules built on printed circuit boards.

2.3.2. Battery voltage is fed to terminals 1 and 2 of multi-wire connector 82PL2 and passes through the fuses marked "HT FUSES" and relay 82RL1 which serves as main switch. A battery voltage regulator driving four power transistors keeps the voltage for the following circuits at approx. 22.5 V, virtually independently of load and battery voltage.

2.3.3. Negative bias for the transmitter is generated by an R-C coupled multivibrator located in module /81\ . Also located in that module are part of the battery voltage regulator and an auxiliary circuit for relay 82 RL1.

2.3.4. High tension for the transmitter is generated by the converter in module /80\ , which is transformer coupled to two output stages each of which is composed of two power transistors. Two square-wave voltages are taken off from transformers 82T1 and 82T2 and rectified in module /83\ . The resulting DC voltages of 500 V each are thereafter connected in series to provide the anode supply voltage of 1000 V. The screen grid voltage, 270 V, is stabilized in a shunt regulator using zener diodes controlled from module /84\ .

2.3.5. Filament voltage for the transmitter is obtained from the stabilized battery voltage, 22.5 V. However, only approx. 21.5 V is available in the transmitter, due to a voltage drop of approx. 1 V in the interconnections.

2.4. Circuit Descriptions of Individual Modules in P 400 24 V DC Power Pack

80 Converter Driver

An RC coupled multivibrator operates at approx. 700 Hz. The frequency is mainly determined by capacitor 80C1 and resistors 80R4 and 80R5. The multivibrator transistors, 82TR13 and 82TR14 are mounted on the right-hand side plate of the power pack so as to ensure adequate cooling. Multivibrator supply voltage is approx. 15 V, applied via the contacts of relay 80RL1. The relay coil is energized from the T 400 transmitter via terminal 12 of multi-wire connector 82PL2.

The multivibrator output signal is coupled through transformer 80T1 to two output stages. The transistors of these output stages, 82TR9, 82TR10, 82TR11, and 82TR12, are mounted on the side plates, two on each.

81 Stabilizer

In module 81 , the first battery voltage stabilizer transistor, 81TR1, is placed together with a diode chain which produces a reference voltage for the regulator. Potentiometer 81R8 permits adjustment of the stabilizer output voltage.

The module also contains an RC coupled multivibrator composed of transistors 81TR2 and 81TR3, for, for the production of negative grid bias. The operating frequency is approx. 20 kHz. The frequency-determining components are 81C10 and 81R10 and 81R12. The square-wave output is rectified in a bridge circuit and the resulting DC voltage is filtered and fed to terminal 11 of multi-wire connector 82PL2.

Relay 82RL1 is protected against excessive current by resistor 81R3, which is connected in series with the supply voltage when power is applied. However, time-delayed relay 81RL1 short-circuits 81R2 shortly after 82RL1 has operated.

82 Circuits Mounted on the Chassis

The current which energizes relay 82RL1 is controlled by the "POWER" switch in the associated T 400 transmitter. Turning the switch from "MAINS OFF" to "STAND-BY" connects terminals 3 and 4 and 5 and 6 of multi-wire connector 82PL2 pairwise together. Diode 82D1 ensures that the relay cannot operate if the battery voltage does not have the correct polarity.

The battery voltage regulator is mounted on the heat sink on the rear of the unit, except for 82TR1 which is located on the left-hand side plate.

Near the top of the TRP 400 cabinet are ten resistors in parallel. In order to reduce the amount of power dissipated in the regulator at high values of battery voltage, these resistors are connected in parallel across the regulator output transistors by relay 82RL2.

The chassis also carries the output transformers of high-tension converter 82T1 and 82T2.

Controlled rectifier 82TR8, which is part of a protection circuit for the high-tension converter, is mounted on the right-hand side plate of the power pack whereas the regulator transistor and zener diodes for the screen grid regulator are located on the left-hand side plate.

83 High-tension Rectifier

The square-wave output from transformers 82T1 and 82T2 is rectified in two bridge circuits in module 83. The DC output of each bridge is approx. 500 V.

The two bridge circuits connect together through resistor 83R3, which is the sensor resistor of an overcurrent protection circuit.

If the voltage drop across 83R3 exceeds approx. 7 V, controlled rectifier 83TR1 ignites; and, via impulse transformer 83T1, controlled rectifier 82TR8 ignites too. This will cause the supply voltage for converter drive stage 80 to disappear, thus stopping the converter. When the contacts of relay 80RL1 open, 82TR8 switches off, and the converter is again ready to operate.

The coil of relay 82RL2, described under module 82, is energized via a pair of contacts in relay 83RL1. The latter relay is energized by the anode current taken from the power pack.

84 Screen Grid Regulator

The screen supply voltage for the transmitter power amplifier valves is regulated in a shunt circuit composed of 8 zener diodes in a series chain, all of which are located on the left-hand side plate of the power pack. A regulator transistor, 82TR4, is connected across one of the diodes to take up production tolerances and temperature drift on the zener diodes. The working point of the regulator transistor is determined by transistor 84TR1. Otherwise, the circuit is designed so that it will maintain constant voltage across the chain of resistors in module 84. The voltage is adjustable with potentiometer 84R3.

2.4. Circuit Description, P 401, AC Power Pack

2.4.1. The circuit diagram is divided into wiring diagram P-0073, showing interconnections between the power pack modules and chassis-mounted components, and circuit diagrams of individual modules.

2.4.2. Mains voltage is fed to terminals 1 and 2 of multi-wire connector 93PL1 and passes through the "HT FUSES" and relay 93RL1, which switches high-tension transformer 93T2 on and off.

2.4.3. Transformer 93T1 has three secondaries. The winding connected between transformer terminals 10 and 11 delivers 21 V, which is rectified in low-tension rectifier 92. The resulting DC output serves as power supply for transistor circuits in the T 400 transmitter and for relays in the transmitter and in the power pack.

Transformer terminals 12 and 14 deliver 13.6 V for use as transmitter filament supply. The centre tap of the filament winding connects to chassis.

Lastly, terminals 15 and 16 deliver 57 V, which is rectified and filtered in the low-tension rectifier. The resulting DC voltage is used as negative grid bias in the transmitter.

2.4.4. High tension for the transmitter is obtained from transformer 93T2, which has two secondaries. Terminals 11 and 12 deliver 500 V, which is rectified in module 91 and used as supply voltage for the screen grid regulator and also as part of the anode voltage.

Terminals 13 and 14 deliver 1100 V, which is rectified and stabilized in module 91 so that the DC output voltage is approx. 1100 V.

The stabilizer in module 91, which uses controlled rectifiers, receives control impulses from module 94.

Module 95 contains a rectifier protection circuit. The screen grid regulator is located in module 90, which contains control circuits for three chassis-mounted transistors.

2.5. Circuit Description of Individual Modules in P 401 AC Power Pack

90 Screen Grid Regulator

The three transistors 93TR1, 93TR2, 93TR3, 93TR4 and 93TR5, all which are located on the left-hand side plate of the power pack, combine with the components of module 90 to make up a series regulator. Because of the high operating voltage, 93TR1 and 93TR4 are connected in series. Reference voltage for the regulator is obtained from diode 90IC1.

Adjustment of the screen grid voltage, nominally 270 V, is carried out with potentiometer 90R6.

The current delivered by the regulator flows through resistor 90R4. If the voltage drop across this resistor exceeds approx. 7 V, the controlled rectifier 90TR1 will ignite, and the regulator collapses. This arrangement protects the series transistors of the regulator.

91 1000 V Stabilizer

The bridge rectifier composed of 91D5, 91D6, 91D7, and 91D8 receives AC voltage from secondary terminals 11 and 12 of transformer 93T2. The rectified voltage is used, after filtering in the LC network composed of 93L1, 93C4, and 93C5 for supplying the screen grid regulator on module 90, and unfiltered for raising the voltage level at the other bridge rectifier of the module, comprising 91D1, 91D2, 91D3, 91D4, 91TR1, 91TR2, 91TR3, ..., 91TR14. Each of the two bridge arms going towards the positive output

terminal 91-7 is composed of seven controlled rectifiers in a series chain. This rectifier bridge is controlled from transformer 93T2 secondary terminals 13 and 14 through resistor 93R3. An RC network having a small time constant is connected across each controlled rectifier in order to ensure uniform distribution of reverse voltage and protection against transients.

Ignition impulses for the controlled rectifiers, obtained from module 94, are fed to seven ignition transformers, 91T1-91T7, in a series chain, whose secondaries are connected through load-equalizing resistors to the gates and cathodes of the controlled rectifiers.

Stabilization is accomplished by controlling, with module 94, the time delay of the ignition impulses with respect to the time at which the AC voltage delivered by transformer 93T2 crosses zero. Module 94 is controlled by the rectified, filtered high tension so that an increase in the high tension will produce a greater delay of the ignition impulses. The result is that a smaller portion of the half-waves of the AC voltage will be rectified than before, thus counteracting the voltage increase.

Resistors 93R6 and 93R7 and capacitor 93C3 impose an adequate starting load on the controlled rectifiers until choke coil 93L2 draws sufficient current. Capacitor 93C3 is also of importance in the commutation of the controlled rectifiers.

92 Low-tension Rectifier

Bridge rectifier 90D1, 90D2, 90D3, and 90D4 receives AC voltage from transformer 93T1. The rectified voltage, nominally 26 V, is filtered by capacitor 93C1 and powers the relays and transistor circuits of the transmitter. Module 94 and the relay coil in 93RL1 are powered from the same source.

Negative grid bias for the transmitter is likewise obtained from 93TR1, rectified by bridge 90D5, 90D6, 90D7, and 90D8 and filtered in 90C1, 90R1, and 90C2.

93 Chassis-mounted Circuits

The current flowing through the primary of transformer 93T1 is controlled by the "POWER" switch of the associated T 400 transmitter. Turning the switch from "MAINS OFF" to "STAND-BY" connects terminals 3 and 4 and 5 and 6 of multi-wire connector 93PL1 pairwise together. Through module 92 and the safety circuit, 93RL1 is activated and the primary of transformer 93T2 is connected to the mains. The high tension is filtered by 93L2 and 93C5 whilst 93L1, 93C4, and 93C5 filter the screen grid regulator supply voltage.

94 Phase-controlled Ignition Circuit

Diodes 94D1 and 94D2 combine with diodes 92D5 and 92D6 to form a bridge rectifier, which connects to secondary terminals 10 and 11 of transformer 93T1. The rectifier bridge delivers a voltage consisting of negative half-waves. The clamping circuit composed of 94C2, 94R1, 94D3, and 94R2 raises the rectifier DC output level so that positive impulses are obtained when the mains voltage crosses zero.

These impulses, after having been stepped up and inverted in 94TR1 and clipped in 94D7, deliver, through 94C5, 94D13, and 94D14, positive starting impulses for the monostable multivibrator composed of 94TR3 and 94TR7.

The multivibrator period time is determined by 94C7, 94R11, and by the super Darlington stage consisting of 94TR5 and 94TR6 which operates as a current generator, controlled by the filtered high tension through voltage divider 95R17, 95R18, 95R19, 95R20, 95R21, and 95R22 on module /95\, which is fed to potentiometer 94R17. The lower the voltage applied to the base of 94TR6 through 94R17 and diode 94D20, the more current will be drawn by the current generator 94TR5, 94TR6, and 94TR13, thus shortening the charging time of the period time determining capacitor 94C7.

At the collector of 94TR7, the leading edge of the resulting square-wave impulse then represents the moment at which the multivibrator starts up whereas the trailing edge represents the moment at which it falls back. The trailing edge is inverted in transistor 94TR8 and ignites, through 94C10and 94D26, the controlled rectifier 94TR10, which will discharge capacitor 94C11through transformers 94T1 and 94T2. This will cause the ignition impulse for the controlled rectifiers on module /91\ to appear on terminals 94-6 and 94-9. The controlled rectifier 94TR10 is extinguished by the self-resonence oscillation between 94C11and the inductances of 94T1 and 94T2.

When the high tension supply is overloaded the controlled rectifier 94TR9 will receive an ignition impulse from module /95\, causing it to short-circuit the supply voltage which is fed to terminal 94-8 through resistor 93R12.The ignition impulses from 94T1 and 94T2 will therefore cease immediately. If the overload has been removed, the ignition impulses can be restarted by first turning the "POWER" switch to the "MAINS OFF" position and leave it there for approx. 3 seconds before turning it on again.

The multivibrator is powered from a separate voltage stabilizer which is composed of current generator 94TR2, 94R6, 94D8, 94D9, 94D10, and 94R5, and the temperature-compensated zener diode chain 94D4, 94D5, 94D6, 94D11, and 94D12.

/95\ Protection Circuit

Diodes 95D2 and 95D3 prevent capacitor 93C3 from being charged from capacitor 93C6 through choke coil 93L2.

Diodes 95D4, 95D5, 95D6, and 95D7 are free-running diodes for choke coil 93L2. Resistors 95R2 and 95R4 are bleeder resistors for capacitors 93C4 and 93C5.

Relay 95RL1 applies voltage to the screen grid regulator; relay 95RL2 short-circuits resistors 95R11 and 95R12 which limit the charging current through capacitor 93C6. Both relays operate at a time delay determined by resistor 95R10 and capacitor 95C2 when the transmitter is turned on.

The high tension load current flows through resistor 95R15. When the voltage across 95R15 and 95C3 exceeds approx. 7 V, zener diode 95D9 will draw current through resistor 95R16. The voltage across 95R16 will ignite the controlled rectifier 95TR1, which now discharges capacitor 95C3 through transformer 95T1. The resulting impulse on the secondary of 95T1 is fed to module /94\ where it ignites the controlled rectifier 94TR9, which consequently blocks the passage of ignition impulses to the controlled rectifier bridge on module /91\.

The voltage divider composed of 95R17, 95R18, 95R19, 95R20, 95R21, and 95R22 provides, via terminals 95-5 and 95-6, control voltage for module /94\.

3 INSTALLATION

It is of the greatest importance, if good results are to be obtained, that the equipment is installed correctly.

3.1. Types of Installation

The TRP 400 radiotelephone may be powered either from a 24 V battery or from 110/220/380/440 V AC mains.

The TRP 400 is composed of the following units:

For 24 V battery operation:
Type T 400 transmitter.
Type R 400 receiver (with built-in type R-0290 power pack).
Type P 400 power pack for transmitter.

For AC mains operation (single-phase or two-phase):
Type T 400 transmitter
Type R 400 receiver (with built-in type R-0289 power pack).
Type P 401 power pack for transmitter.

The units are connected together in the type T-0341 cabinet, in which also the connection to the permanent installation is made.

3.2. Removal of Units

The units are mounted on ball tracks and, after removal of the front-panel screws, may be pulled as far out as the built-in stop permits. Then the cables may be unplugged, and the individual units may be removed entirely from the cabinet by lifting the handles slightly while pulling the units out.

When putting a unit back in place care should be taken that the stop screw of each ball track will be positioned in the chassis cut-out provided for the purpose.

3.3. Connection to the Permanent Installation

It will be seen from cabinet cable diagram drawing T-0346 that the terminals to be used when making the installation are marked with the letters A to F inclusive; besides, necessary cable cross sections are given.

Drawing T-0354 shows, in somewhat simpler form, only those leads which are to be connected when making the installation.

A main switch and fuses are to be provided in the supply leads.

Necessary fuse ratings appear from Table 3.1.

Power Pack	Supply Voltage	External Fuses
P 400	24 V DC	50 A
P 401	110 V 50/60 Hz	20 A
P 401	220 V 50/60 Hz	10 A
P 401	380 V 50/60 Hz	6 A
P 401	440 V 50/60 Hz	6 A

Table 3.1.

3.4. Power Pack Replacement

The cabinet cabling is dependent of the type of power pack used. The P 400 24V power pack requires the installation of two plates on which a total of 10 resistors are mounted. These two plates should be mounted inside the TRP 400 cabinet near its top and wired in accordance with Drawing T-0346. Further-more the safety switch arrangement is dependent of the power pack in use.

The transmitter filament voltage delivered by the power packs depends on the type designation.
The P 400 delivers 21.5 V filament voltage whereas the P 401 delivers 12.6 V inclusive of a voltage drop of approx. 1 V in the interconnections. A total of five filament dropping resistors are therefore installed in the T 400 transmitter.

The resistors are numbered 57R6, 57R7, 57R9, 57R11, and 57R13. They are placed in the transmitter, directly behind the front panel.

When using the P 400 power pack, (24 V battery operation), these resistors must be inserted in the filament circuits. When using the P 401 power pack, (AC operation), they are to be short-circuited.

A check should be made whether the resistors referred to are correctly wired, before connecting the equipment to the permanent installation.

3.5. Supply Voltage Switching in P 401 (AC Operation)

Voltage switching in the P 401 is carried out by unsoldering the connection to and between the terminals of the two transformers 93T1 and 93T2. The necessary connections are shown in Drawing P-0073 and are also stated on the plate on the top of the large capacitor at the back of the power pack.

When switching voltages it is also necessary to replace the four fuses on the front panel of the power pack. Fuse ratings are given in paragraph 2.1.3.

4 OPERATING INSTRUCTIONS

4.1. Operation of P 400 and P 401 Power Packs

The power pack is controlled entirely from the associated T 400 transmitter. Reference is made to Chapter 4 of "Instruction Manual for T 400 Transmitter".

5 SIMPLE SERVICE

5.1. Voltage Checking

The voltages delivered by the power pack may be checked with the "CHECK SWITCH" incorporated in the transmitter. The switch is operated by setting it to the desired position and thereafter pulling the knob out. Readings are made on the "LEVEL METER" while keeping the switch knob pulled out.

5.1.1. Low-tension Checking

With the "POWER" switch at "STAND-BY" and the "CHECK SWITCH" at "26V" the meter should read between 23 V and 33 V if the equipment is operated from a P 400 power pack (24 V battery operation), and between 23 V and 29 V if the equipment is operated from a P 401 power pack (AC operation). In this position of the "CHECK SWITCH", the meter reads full scale at 50 V.

The negative grid bias for the transmitter valves may be checked with the "CHECK SWITCH" set at "36V". The voltage should be 36 V ±3 V. In this position, too, the meter reads full scale at 50 V.

If the meter shows no reading in these positions reference is made to section 5.2.

5.1.2. High-tension Checking

With the "POWER" switch at "LOW", the "MODE" switch at "A3H", the "BAND" and "CHANNEL" switches set to a channel equipped with a crystal, and the "CHECK SWITCH" at "1000V", the meter should read between 1000 V and 1100 V with the transmitter turned on. Full-scale meter reading corresponds to 2500 V in this case.

With the "CHECK SWITCH" at "270V" and otherwise the same settings as above, the meter should read 270 V ±15 V. Full-scale meter reading corresponds to 500 V.

If the meter shows no reading, reference is made to section 5.2.

5.2. Replacement of Fuses

If the "LT" lamp on the transmitter does not show light and no meter reading is obtained when performing the low-tension checks described under 5.1.1. above, the fuses marked "LT FUSES" should be checked.

If no meter reading can be obtained when performing the high-tension checks described under 5.1.2. above, the fuses marked "HT FUSES" in the power pack should be checked.

Fuse ratings depend on the power pack in use. Reference is made to paragraph 2.1.3.

Note that fuses of higher ratings than those specified must not be used.

5.3. Inspection of Power Pack

Three interlock switches installed near the right side of the cabinet prevent the power pack from delivering high tension when one of the units is pulled out. For use in making adjustments, however, the interlock switches may be closed by pulling their pistons downwards and out to locked positions.

The high voltages are exceedingly dangerous and the greatest care must therefore be shown if the equipment is started up with one or more units pulled out of the cabinet.

For the P 401 power pack (AC operation) it also applies that high tension is present in it even if one or more interlock switches are open.

Since the supply voltage in AC operation is also highly dangerous and this voltage is present at the terminals in the cabinet and in the units installed in it, it is suggested that the external main switch controlling the supply voltage always be opened before pulling out any unit.

ABBREVIATIONS

A	= ampere
C	= capacitor
Car.	= carbon
Cer.	= ceramic
D	= diode
F	= farad
FS	= fuse
H	= henry
IC	= integrated circuit
k	= kilo or 10^3
L	= inductor
lin.	= linear
log.	= logaritmic
m	= milli or 10^{-3}
M	= mega or 10^6
Mi	= mica
MP	= metalized paper
μ	= micro or 10^{-6}
n	= nano or 10^{-9}
NTC	= neg. temp. coefficient
p	= pico or 10^{-12}
PL	= plug
polyes.	= polyester
polyst.	= polystyrene
PTC	= pos. temp. coefficient
R	= resistor
RL	= relay
S	= switch
SK	= socket
SL	= lamp
T	= transformer
Tan	= tantal electrolytic
TR	= transistor
V	= working voltage DC
Vl...	= valve
Vac.	= working voltage AC
Var.	= variable
Varicap	= variable capacitance diode
ww	= wire wound
W	= watt
W.alum.	= wet aluminium electrolytic
X	= crystal, crystal osc. or crystal filters

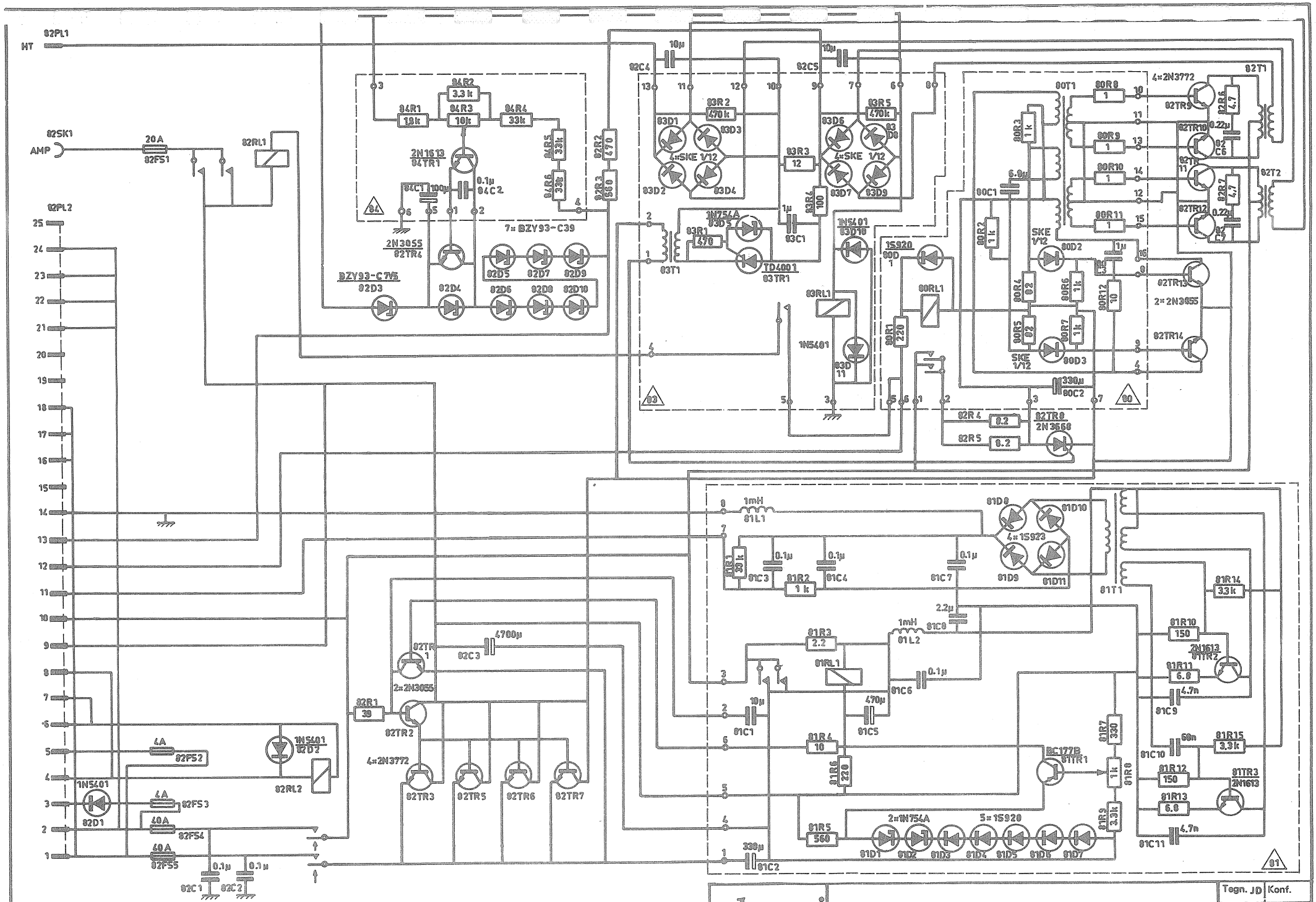

skanti

DC-POWER UNIT

Tegn. JD	Konf.
P - 0080 - 3	
16 - 10 - 70	

PARTS LIST

FOR

CONVERTER DRIVER

80

80C 1	6.8 µF	10%	100V	Polyes.
80C 2	330 µF		40V	W.alum.
80C 3	1 µF	10%	100V	Polyes.
80D 1	1S920			
80D 2	SKE 1/12			
80D 3	SKE 1/12			
80R 1	220 ohm	5%	1W	Car.
80R 2	1 kohm	5%	1W	Car.
80R 3	1 kohm	5%	1W	Car.
80R 4	82 ohm	5%	3W	ww
80R 5	82 ohm	5%	3W	ww
80R 6	1 kohm	5%	1/8W	Car.
80R 7	1 kohm	5%	1/8W	Car.
80R 8	1 ohm	5%	5W	ww
80R 9	1 ohm	5%	5W	ww
80R10	1 ohm	5%	5W	ww
80R11	1 ohm	5%	5W	ww
80R12	10 ohm	5%	3W	ww
80RL 1	RELAY		V23016-B0005-A202	
80T 1	TRANSFORMER		SKANTI CODE: P-0091	

PARTS LIST

FOR

STABILIZER

81

81C 1	10 µF	10%	100V	Polyes.
81C 2	330 µF		40V	W.alum.
81C 3	0.1 µF	10%	100V	Polyes.
81C 4	0.1 µF	10%	100V	Polyes.
81C 5	470 µF	10%	16V	W.alum.
81C 6	0.1 µF	10%	100V	Polyes.
81C 7	0.1 µF	10%	250V	Polyes.
81C 8	2.2 µF	10%	100V	Polyes.
81C 9	4.7 nF	-20/+80%	400V	Cer.
81C10	68 nF	10%	100V	Polyes.
81C11	4.7 nF	-20/+80%	400V	Cer.
81D 1	1N754A	Zener		
81D 2	1N754A	Zener		
81D 3	1S920			
81D 4	1S920			
81D 5	1S920			
81D 6	1S920			
81D 7	1S920			
81D 8	1S923			
81D 9	1S923			
81D10	1S923			
81D11	1S923			
81L 1	1 mH	RF CHOKE	10%	
81L 2	1 mH	RF CHOKE	10%	
81R 1	33 kohm	5%	1/3W	Car.
81R 2	1 kohm	5%	1W	Car.
81R 3	2.2 ohm	5%	3W	Car.
81R 4	10 ohm	5%	1/8W	Car.
81R 5	560 ohm	5%	1/8W	Car.
81R 6	220 ohm	5%	1W	Car.
81R 7	330 ohm	5%	1/8W	Car.
81R 8	1 kohm	Var.		Car.
81R 9	3.3 kohm	5%	1/8W	Car.
81R10	150 ohm	5%	1/8W	Car.
81R11	6.8 ohm	5%	1/8W	Car.
81R12	150 ohm	5%	1/8W	Car.
81R13	6.8 ohm	5%	1/8W	Car.
81R14	3.3 ohm	5%	1/8W	Car.
81R15	3.3 ohm	5%	1/8W	Car.
81RL 1	RELAY		V23016-B0005-A202	
81T 1	TRANSFORMER		SKANTI CODE: P-0074	
81TR 1	BC177B			
81TR 2	2N1613			
81TR 3	2N1613			

PARTS LIST

FOR

DC POWER PACK (ELECTRICAL PARTS)

82

82C 1	0.1 µF	10%	250V	Polyes.
82C 2	0.1 µF	10%	250V	Polyes.
82C 3	4700 µF		40V	W.alum.
82C 4	10 µF		630V	MP
82C 5	10 µF		630V	MP
82C 6	0.22 µF	10%	400V	Polyes.
82C 7	0.22 µF	10%	400V	Polyes.
82D 1	1N5401			
82D 2	1N5401			
82D 3	BZY93-C7V5	Zener		
82D 4	BZY93-C39	Zener		
82D 5	BZY93-C39	Zener		
82D 6	BZY93-C39	Zener		
82D 7	BZY93-C39	Zener		
82D 8	BZY93-C39	Zener		
82D 9	BZY93-C39	Zener		
82D10	BZY93-C39	Zener		
82FS 1	20 A	FAST	6.3Ø x 32mm	
82FS 2	4 A	FAST	6.3Ø x 32mm	
82FS 3	4 A	FAST	6.3Ø x 32mm	
82FS 4	40 A	FAST	7Ø x 32mm	
82FS 5	40 A	FAST	7Ø x 32mm	
82PL 1	PLUG	L623/P		
82PL 2	25 POLE PLUG	XP25	McMurdo	
82R 1	39 ohm	5%	25W	ww
82R 2	470 ohm	5%	33W	ww
82R 3	560 ohm	5%	33W	ww
82R 4	8.2 ohm	5%	33W	ww
82R 5	8.2 ohm	5%	33W	ww
82R 6	4.7 ohm	5%	5W	ww
82R 7	4.7 ohm	5%	5W	ww
82R 8 til 17	6.8 ohm	5%	27W	ww
82RL 1	RELAY	V23009-A0007-A032		
82RL 2	RELAY	AMF	PR11 DG	
82SK 1	SOCKET	24018		
82T 1	TRANSFORMER		SKANTI CODE: P-0092	
82T 2	TRANSFORMER		SKANTI CODE: P-0092	
82TR 1	2N3055			
82TR 2	2N3055			
82TR 3	2N3772			
82TR 4	2N3055			
82TR 5	2N3772			

82TR 6	2N3772
82TR 7	2N3772
82TR 8	2N3668
82TR 9	2N3772
82TR10	2N3772
82TR11	2N3772
82TR12	2N3772
82TR13	2N3055
82TR14	2N3055

PARTS LIST

FOR

HF - RECTIFIER

83

83C 1	1 µF	10%	100V	Polyes.
83D 1	SKE 1/12			
83D 2	SKE 1/12			
83D 3	SKE 1/12			
83D 4	SKE 1/12			
83D 5	1N754A	Zener		
83D 6	SKE 1/12			
83D 7	SKE 1/12			
83D 8	SKE 1/12			
83D 9	SKE 1/12			
83D10	1N5401			
83D11	1N5401			
83R 1	470 ohm	5%	1/2W	Car.
83R 2	470 kohm	5%	1W	Car.
83R 3	12 ohm	5%	5W	ww
83R 4	100 ohm	5%	1/2W	Car.
83R 5	470 kohm	5%	1W	Car.
83RL 1	RELAY		V23154-M0702-C101	
83T 1	TRANSFORMER		1T235	
83TR 1	TD 4001			

PARTS LIST

FOR

SCREEN GRID VOLTAGE REGULATOR (DC)

84

84C 1	100 μF		16V	W.alum.
84C 2	0.1 μF	10%	250V	Polyes.
84R 1	1.8 kohm	5%	1/8W	Car.
84R 2	3.3 kohm	5%	1/4W	Car.
84R 3	10 kohm	Var.		Car.
84R 4	33 kohm	5%	1/4W	Car.
84R 5	33 kohm	5%	1/4W	Car.
84R 6	33 kohm	5%	1/4W	Car.
84TR 1	2N1613			

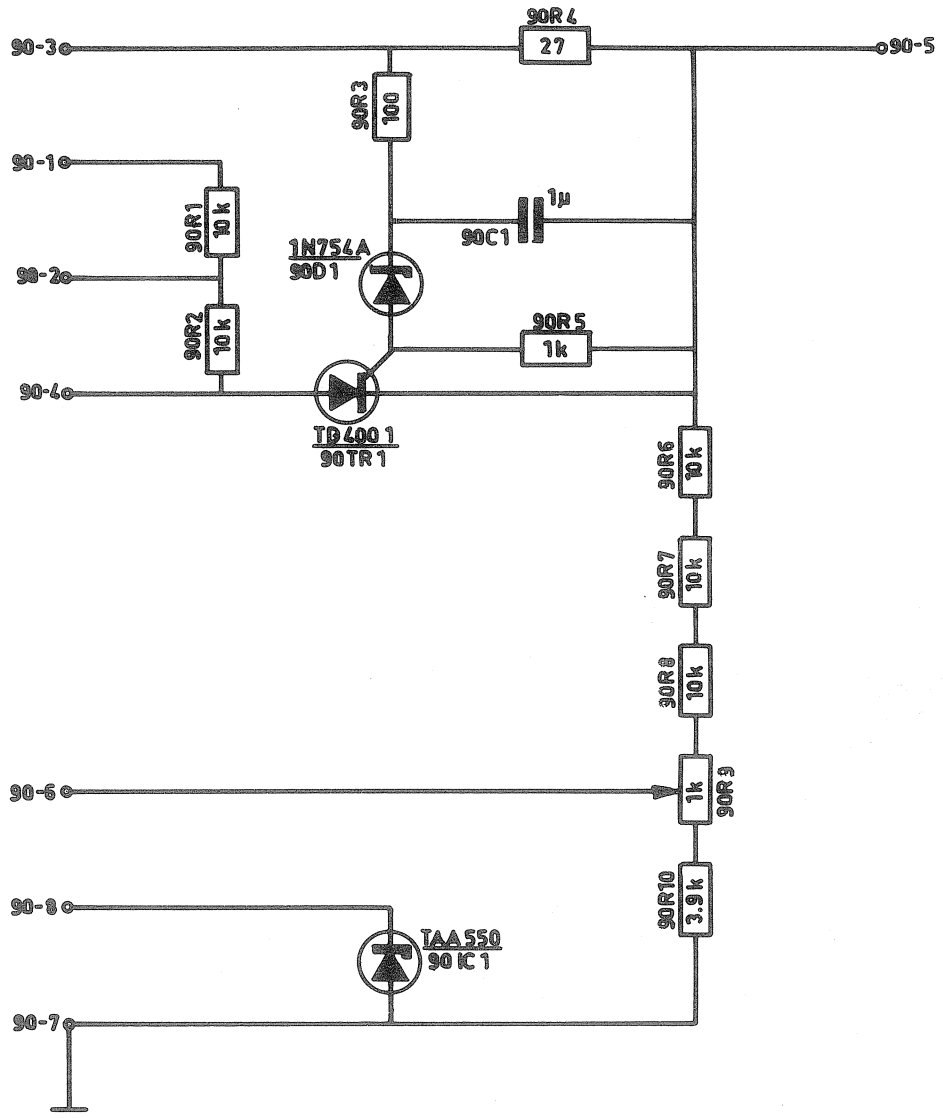

skanti

SCREEN GRID VOLTAGE REGULATOR 90

Tegn. JD	Konf.
P - 0029 - 2	
7 - 10 - 71	

PARTS LIST

FOR

SCREEN GRID VOLTAGE REGULATOR

90

90C 1	1 μF	10%	100V	Polyes.
90D 1	1N754A	zener		
90IC 1	TAA 550			
90R 1	10 kohm	5%	5W	ww
90R 2	10 kohm	5%	5W	ww
90R 3	100 ohm	5%	1/4W	Car.
90R 4	27 ohm	5%	5W	ww
90R 5	1 kohm	5%	1/8W	Car.
90R 6	10 kohm	5%	1W	Car.
90R 7	10 kohm	5%	1W	Car.
90R 8	10 kohm	5%	1W	Car.
90R 9	1 kohm	Var.		Car.
90R10	3.9 kohm	5%	1/4W	Car.
90TR 1	TD4001			

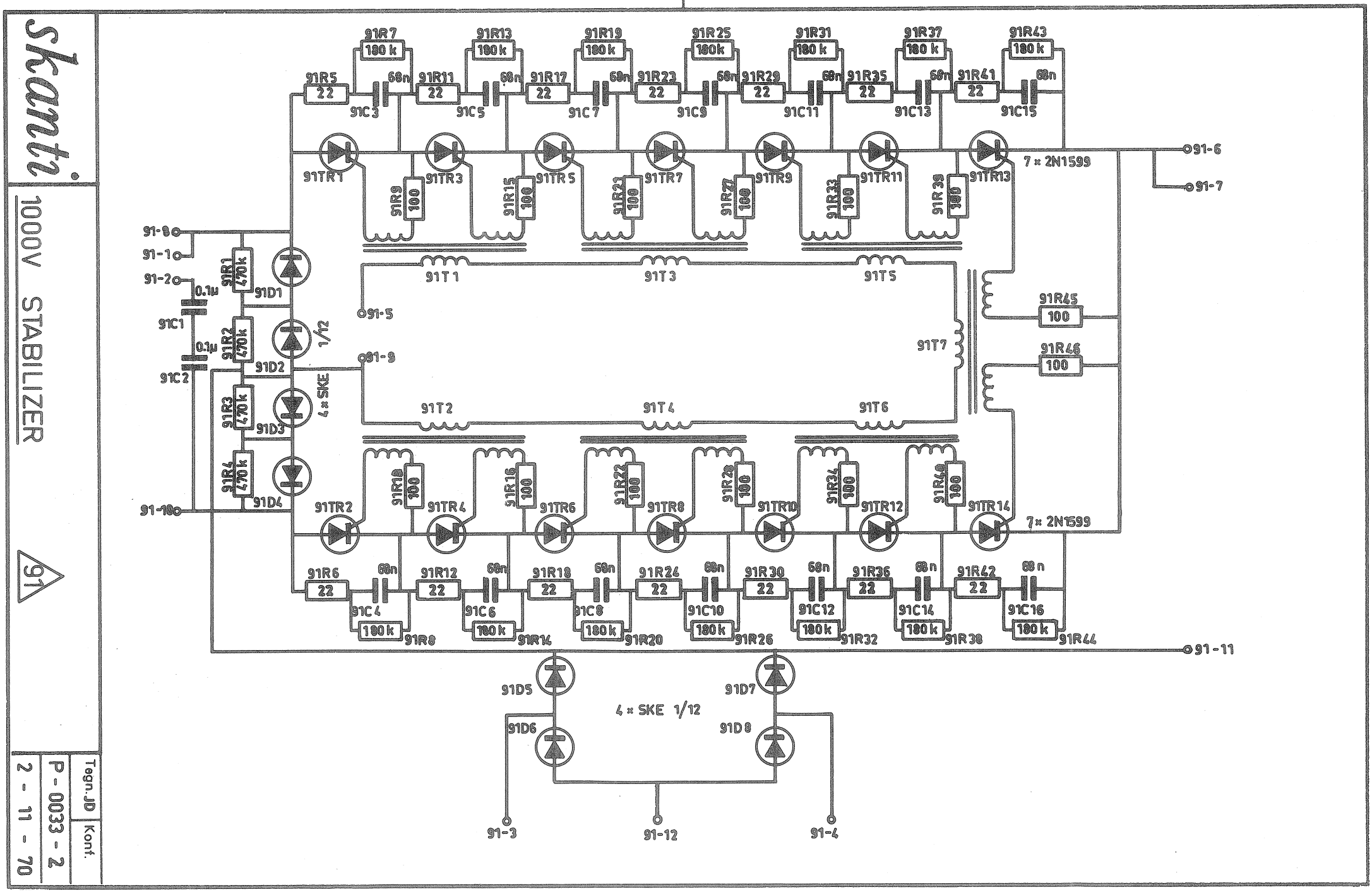
skanti
1000V STABILIZER
91
Tegn. JD
Kont.
P - 0033 - 2
2 - 11 - 70
91R7 180 k
91R13 180 k
91R19 180 k
91R25 180 k
91R31 180 k
91R37 180 k
91R43 180 k
91R5 22
91R11 22
91R17 22
91R23 22
91R29 22
91R35 22
91R41 22
68n
91C3
91C5
91C7
91C9
91C11
91C13
91C15
91TR1
91TR3
91TR5
91TR7
91TR9
91TR11
91TR13
7 × 2N1599
91R9 100
91R15 100
91R21 100
91R27 100
91R33 100
91R39 100
91-6
91-7
91-8
91-1
91-2
0.1µ
91C1
91C2
91R1 470 k
91R2 470 k
91R3 470 k
91R4 470 k
91D1
91D2
91D3
91D4
1/12
4 × SKE
91-5
91-9
91-10
91T1
91T3
91T5
91T7
91T2
91T4
91T6
91R45 100
91R46 100
91R10 100
91R16 100
91R22 100
91R28 100
91R34 100
91R40 100
91TR2
91TR4
91TR6
91TR8
91TR10
91TR12
91TR14
7 × 2N1599
91R6 22
91R12 22
91R18 22
91R24 22
91R30 22
91R36 22
91R42 22
91C4
91C6
91C8
91C10
91C12
91C14
91C16
180 k
91R8
91R14
91R20
91R26
91R32
91R38
91R44
91-11
91D5
91D6
91D7
91D8
4 × SKE 1/12
91-3
91-12
91-4

PARTS LIST

FOR

1000V STABILIZER

91

91C 1	0.1 µF	10%	1600V	OPA-1-909xi
91C 2	0.1 µF	10%	1600V	OPA-1-909xi
91C 3	68 nF	10%	630V	Polyes.
91C 4	68 nF	10%	630V	Polyes.
91C 5	68 nF	10%	630V	Polyes.
91C 6	68 nF	10%	630V	Polyes.
91C 7	68 nF	10%	630V	Polyes.
91C 8	68 nF	10%	630V	Polyes.
91C 9	68 nF	10%	630V	Polyes.
91C10	68 nF	10%	630V	Polyes.
91C11	68 nF	10%	630V	Polyes.
91C12	68 nF	10%	630V	Polyes.
91C13	68 nF	10%	630V	Polyes.
91C14	68 nF	10%	630V	Polyes.
91C15	68 nF	10%	630V	Polyes.
91C16	68 nF	10%	630V	Polyes.
91D 1	SKE 1/12			
91D 2	SKE 1/12			
91D 3	SKE 1/12			
91D 4	SKE 1/12			
91D 5	SKE 1/12			
91D 6	SKE 1/12			
91D 7	SKE 1/12			
91D 8	SKE 1/12			
91R 1	470 ohm	5%	1W	Car.
91R 2	470 ohm	5%	1W	Car.
91R 3	470 ohm	5%	1W	Car.
91R 4	470 ohm	5%	1W	Car.
91R 5	22 ohm	10%	1W	ww
91R 6	22 ohm	10%	1W	ww
91R 7	180 kohm	5%	1/8W	Car.
91R 8	180 kohm	5%	1/8W	Car.
91R 9	100 ohm	5%	1/8W	Car.
91R10	100 ohm	5%	1/8W	Car.
91R11	22 ohm	10%	1W	ww
91R12	22 ohm	10%	1W	ww
91R13	180 kohm	5%	1/8W	Car.
91R14	180 kohm	5%	1/8W	Car.
91R15	100 ohm	5%	1/8W	Car.
91R16	100 ohm	5%	1/8W	Car.
91R17	22 ohm	10%	1W	ww
91R18	22 ohm	10%	1W	ww
91R19	180 kohm	5%	1/8W	Car.
91R20	180 kohm	5%	1/8W	Car.

91R21	100 ohm	5%	1/8W	Car.
91R22	100 ohm	5%	1/8W	Car.
91R23	22 ohm	10%	1W	ww
91R24	22 ohm	10%	1W	ww
91R25	180 kohm	5%	1/8W	Car.
91R26	180 kohm	5%	1/8W	Car.
91R27	100 ohm	5%	1/8W	Car.
91R28	100 ohm	5%	1/8W	Car.
91R29	22 ohm	10%	1W	ww
91R30	22 ohm	10%	1W	ww
91R31	180 kohm	5%	1/8W	Car.
91R32	180 kohm	5%	1/8W	Car.
91R33	100 ohm	5%	1/8W	Car.
91R34	100 ohm	5%	1/8W	Car.
91R35	22 ohm	10%	1W	ww
91R36	22 ohm	10%	1W	ww
91R37	180 kohm	5%	1/8W	Car.
91R38	180 kohm	5%	1/8W	Car.
91R39	100 ohm	5%	1/8W	Car.
91R40	100 ohm	5%	1/8W	Car.
91R41	22 ohm	10%	1W	ww
91R42	22 ohm	10%	1W	ww
91R43	180 kohm	5%	1/8W	Car.
91R44	180 kohm	5%	1/8W	Car.
91R45	100 ohm	5%	1/8W	Car.
91R46	100 ohm	5%	1/8W	Car.
91T 1 til 7	TRANSFORMER		IT233	
91TR 1 til 14		2N1599		

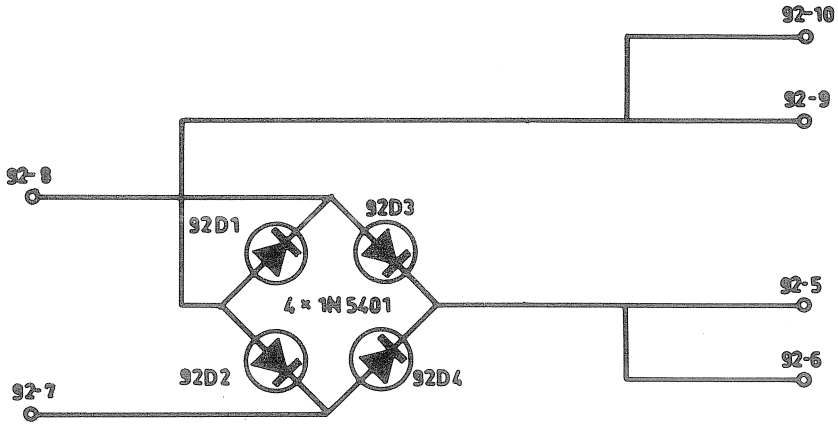

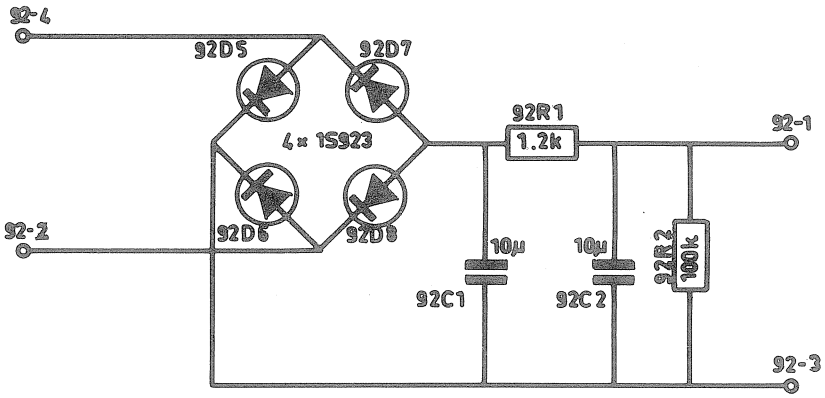

skanti

LT-RECTIFIER

92

Tegn. JD	Konf.
P - 0037 - 1	
2 - 11 - 70	

PARTS LIST

FOR

LT - RECTIFIER

92

92C 1	10 µF	10%	100V	Polyes.
92C 2	10 µF	10%	100V	Polyes.
92D 1	1N5401			
92D 2	1N5401			
92D 3	1N5401			
92D 4	1N5401			
92D 5	1S923			
92D 6	1S923			
92D 7	1S923			
92D 8	1S923			
92R 1	1.2 kohm	5%	3W	ww
92R 2	100 kohm	5%	1/8W	Car.

PARTS LIST

FOR

AC POWER PACK (ELECTRICAL PARTS)

93

93C 1	470 µF	1%	125V	Polyes.
93C 2	4700 µF		40V	Polyes.
93C 3	0.25 µF		3150V	MP
93C 4	200 µF		350V	MP
93C 5	200 µF		350V	MP
93C 6	31.5 µF	10%	1600V	MP
93D 1	1N5401			
93FS 1-2	6.3A 110V AC slow HT		034.3425	Schurter
93FS 1-2	3.15A 220V AC slow HT		034.3422	Schurter
93FS 1-2	2A 380V AC slow HT		034.3420	Schurter
93FS 1-2	1.6A 440V AC slow HT		034.3419	Schurter
93FS 3-4	2A 110V AC slow LT		034.3420	Schurter
93FS 3-4	1A 220V AC slow LT		034.3417	Schurter
93FS 3-4	0.8A 380V AC slow LT		034.3416	Schurter
93FS 3-4	0.63A 440V AC slow LT		034.3415	Schurter
93L 1	COIL		SKANTI CODE: P-0096	
93L 2	COIL		SKANTI CODE: P-0094	
93PL 1	25 pole Plug		XP25	McMurdo
93PL 2	Plug		L623/P	B&L
93R 1	150 ohm	5%	1/8W	Car.
93R 2	68 ohm	5%	14W	ww
93R 3	150 ohm	5%	1/8W	Car.
93R 4	68 ohm	5%	14W	ww
93R 5	68 ohm	5%	14W	ww
93R 6	1 kohm	5%	27W	ww
93R 7	1 kohm	5%	27W	ww
93R 8	180 kohm	5%	1W	ww
93R 9	180 kohm	5%	1W	ww
93R10	180 kohm	5%	1W	ww
93R11	180 kohm	5%	1W	ww
93R12	680 ohm	5%	1/8W	Car.
93R13	100 kohm	5%	40W	ww
93RL 1	RELAY		V23009-A0007-A032	
93T 1	TRANSFORMER		SKANTI CODE: P-0095	
93T 2	TRANSFORMER		SKANTI CODE: P-0093	
93TR 1	2N5240			
93TR 2	2N4240			
93TR 3	2N4240			
93TR 4	2N5240			
93TR 5	2N4240			

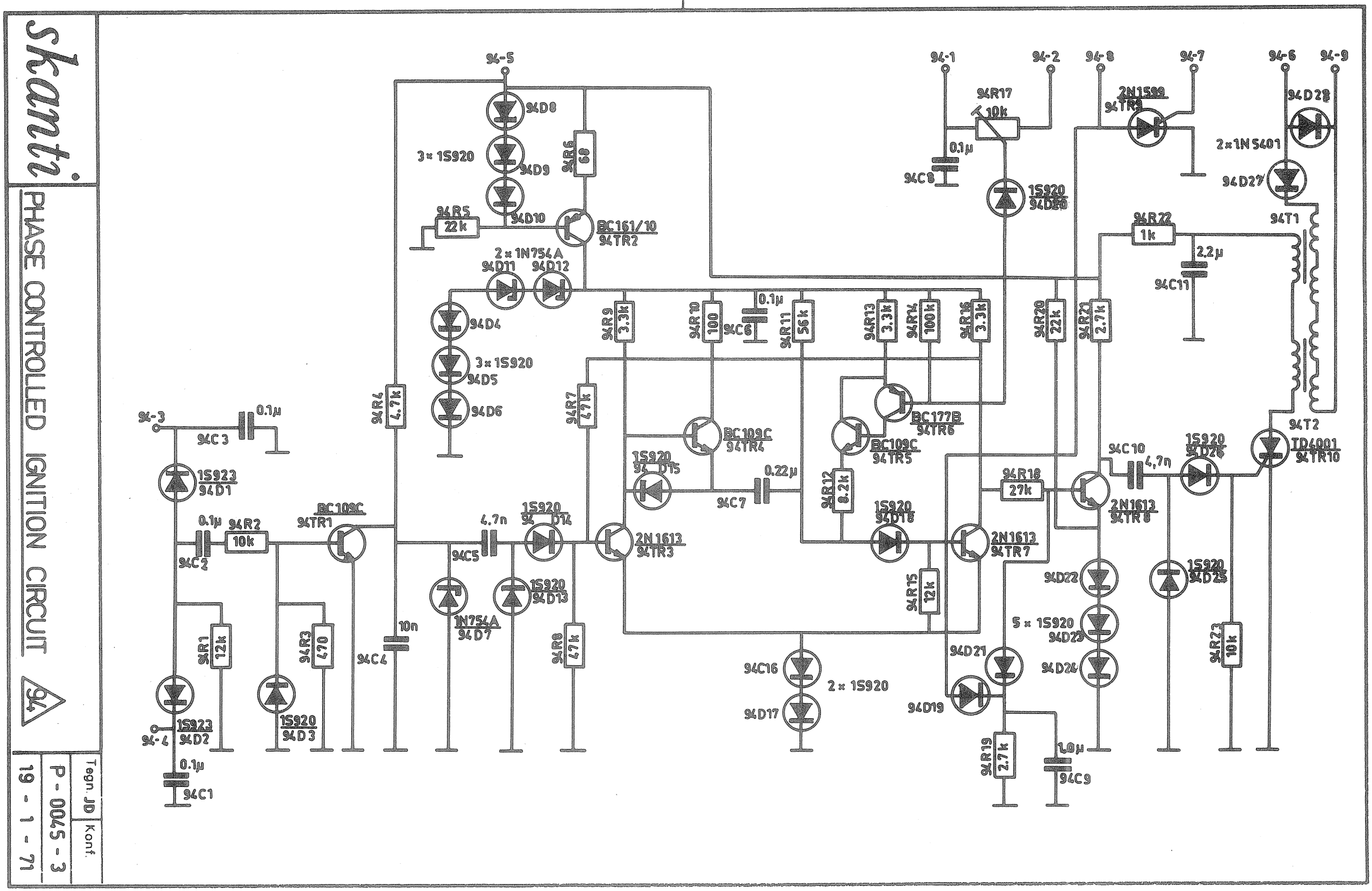
skanti
PHASE CONTROLLED IGNITION CIRCUIT
94
Tegn. JD
Konf.
P - 0045 - 3
19 - 1 - 71
94-1
94-2
94-3
94-4
94-5
94-6
94-7
94-8
94-9
94R17 10k
0.1µ 94C8
1S920 94D26
2N1599 94TR9
94D28
2×1N5401
94D27
94T1
94R22 1k
2.2µ 94C11
94T2
TD4001 94TR10
94C10 4,7n
1S920 94D24
2N1613 94TR8
94R18 27k
94R20 22k
94R21 2.7k
94D8
3×1S920
94D9
94D10
94R6 68
94R5 22k
BC161/10 94TR2
2×1N754A
94D11
94D12
94D4
3×1S920
94D5
94D6
94R4 4.7k
94R7 47k
94R9 3.3k
94R10 100
0.1µ 94C6
94R11 56k
94R13 3.3k
94R14 100k
94R16 3.3k
BC177B 94TR6
BC109C 94TR5
BC109C 94TR4
1S920 94D15
0.22µ 94C7
94R12 8.2k
1S920 94D16
2N1613 94TR7
94R15 12k
94D22
5×1S920
94D23
94D24
94D21
94D19
94R19 2.7k
1,0µ 94C9
1S920 94D25
94R23 10k
94C16
2×1S920
94D17
0.1µ 94C3
1S923 94D1
0.1µ 94C2
94R2 10k
BC109C 94TR1
94R1 12k
1S923 94D2
0.1µ 94C1
94R3 470
1S920 94D3
10n 94C4
4.7n 94C5
1S920 94D14
1N754A 94D7
1S920 94D13
2N1613 94TR3
94R8 47k

PARTS LIST

FOR

PHASE CONTROLLED IGNITION CIRCUIT

94

94C 1	0.1 µF	10%	100V	Polyes.
94C 2	0.1 µF	10%	100V	Polyes.
94C 3	0.1 µF	10%	100V	Polyes.
94C 4	10 nF	10%	250V	Polyes.
94C 5	4.7 nF	-20/+80%	30V	Cer.
94C 6	0.1 µF	10%	100V	Polyes.
94C 7	0.22 µF	10%	100V	Polyes.
94C 8	0.1 µF	10%	100V	Polyes.
94C 9	1.0 µF	10%	100V	Polyes.
94C10	4.7 nF	-20/+80%	30V	Cer.
94C11	2.2 µF	10%	100V	Polyes.
94D 1 til 6	1S920			
94D 7	1N754A	Zener		
94D 8 til 10	1S920			
94D11	1N754A	Zener		
94D12	1N754A	Zener		
94D13 til 26	1S920			
94D27 til 28	1N5401			
94R 1	12 kohm	5%	1/8W	Car.
94R 2	10 kohm	5%	1/8W	Car.
94R 3	470 ohm	5%	1/8W	Car.
94R 4	4.7 kohm	5%	1/8W	Car.
94R 5	22 kohm	5%	1/8W	Car.
94R 6	68 ohm	5%	1/8W	Car.
94R 7	47 kohm	5%	1/8W	Car.
94R 8	47 kohm	5%	1/8W	Car.
94R 9	3.3 kohm	5%	1/8W	Car.
94R10	100 ohm	5%	1/8W	Car.
94R11	56 kohm	5%	1/8W	Car.
94R12	8.2 kohm	5%	1/8W	Car.
94R13	3.3 kohm	5%	1/8W	Car.
94R14	100 kohm	5%	1/8W	Car.
94R15	12 kohm	5%	1/8W	Car.
94R16	3.3 kohm	5%	1/8W	Car.
94R17	10 kohm	Var.		Car.
94R18	27 kohm	5%	1/8W	Car.
94R19	2.7 kohm	5%	1/8W	Car.
94R20	22 kohm	5%	1/8W	Car.
94R21	2.7 kohm	5%	1/8W	Car.
94R22	1 kohm	5%	1/8W	Car.
94R23	10 kohm	5%	1/8W	Car.
94T 1-2	TRANSFORMERS		IT233	
94TR 1	BC109C		94TR 6	BC177B
94TR 2	BC161/10		94TR 7	2N1613
94TR 3	2N1613		94TR 8	2N1613
94TR 4- 5	BC109C		94TR 9	2N1599
			94TR10	TD4001

94R11	56 kohm	5%	1/8W	Car.
94R12	8.2 kohm	5%	1/8W	Car.
94R13	3.3 kohm	5%	1/8W	Car.
94R14	100 kohm	5%	1/8W	Car.
94R15	12 kohm	5%	1/8W	Car.
94R16	3.3 kohm	5%	1/8W	Car.
94R17	10 kohm	Var.		Car.
94R18	27 kohm	5%	1/8W	Car.
94R19	22 kohm	5%	1/8W	Car.
94R20	2.7 kohm	5%	1/8W	Car.
94R21	1 kohm	5%	1/8W	Car.
94R22	10 kohm	5%	1/8W	Car.
94T 1	TRANSFORMER		1T233	
94T 2	TRANSFORMER		1T233	
94TR 1	BC109C			
94TR 2	BC161/10			
94TR 3	2N1613			
94TR 4	BC109C			
94TR 5	BC109C			
94TR 6	BC177B			
94TR 7	2N1613			
94TR 8	2N1613			
94TR 9	2N1599			
94TR10	TD4001			

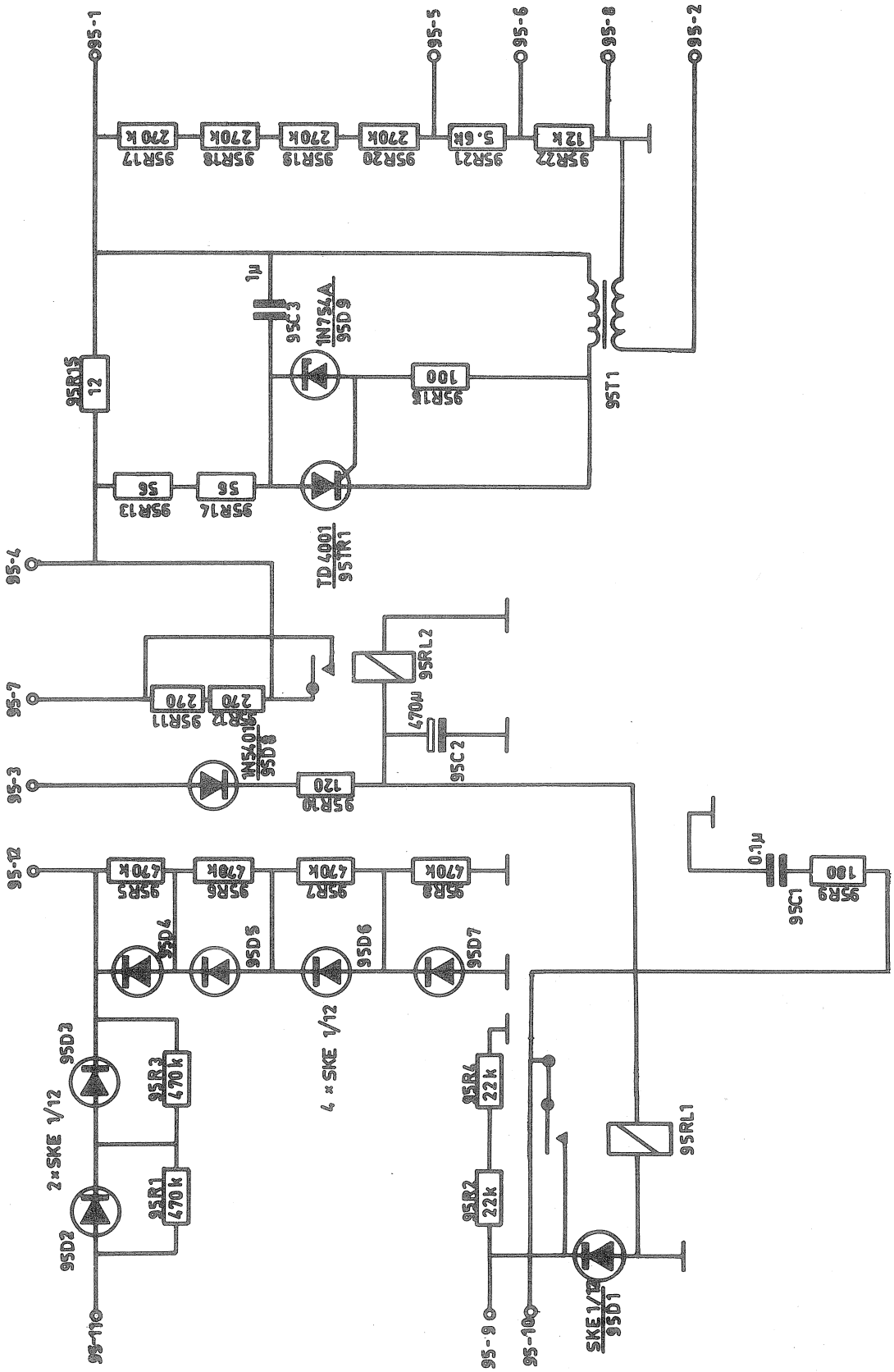

skanti

PROTECTION CIRCUITS

95

Tegn. JD	Konf.
P-0049 - 3	
2 - 11 - 70	

PARTS LIST

FOR

PROTECTION CIRCUITS

95

95C 1	0.1 μF	10%	1000V	
95C 2	470 μF		16V	W.Alum.
95C 3	1 μF	10%	100V	Polyes.
95D 1	SKE 1/12			
95D 2	SKE 1/12			
95D 3	SKE 1/12			
95D 4	SKE 1/12			
95D 5	SKE 1/12			
95D 6	SKE 1/12			
95D 7	SKE 1/12			
95D 8	1N5401			
95D 9	1N754A	Zener		
95R 1	470 kohm	5%	1W	Car.
95R 2	22 kohm	5%	11W	ww
95R 3	470 kohm	5%	1W	Car.
95R 4	22 kohm	5%	11W	ww
95R 5	470 kohm	5%	1W	Car.
95R 6	470 kohm	5%	1W	Car.
95R 7	470 kohm	5%	1W	Car.
95R 8	470 kohm	5%	1W	Car.
95R 9	180 ohm	5%	1/2W	Car.
95R10	120 ohm	5%	5W	ww
95R11	270 ohm	5%	1W	Car.
95R12	270 ohm	5%	1W	Car.
95R13	56 ohm	5%	3W	ww
95R14	56 ohm	5%	3W	ww
95R15	12 ohm	5%	5W	ww
95R16	100 ohm	5%	1/4W	Car.
95R17	270 kohm	5%	1/4W	Car.
95R18	270 kohm	5%	1/4W	Car.
95R19	270 kohm	5%	1/4W	Car.
95R20	270 kohm	5%	1/4W	Car.
95R21	5.6 kohm	5%	1/4W	Car.
95R22	12 kohm	5%	1/4W	Car.
95RL 1	RELAY		V23016-B0005-A202	
95RL 2	RELAY		V23016-B0005-A202	
95T 1	TRANSFORMER		1T235	
95TR 1	TD4001			

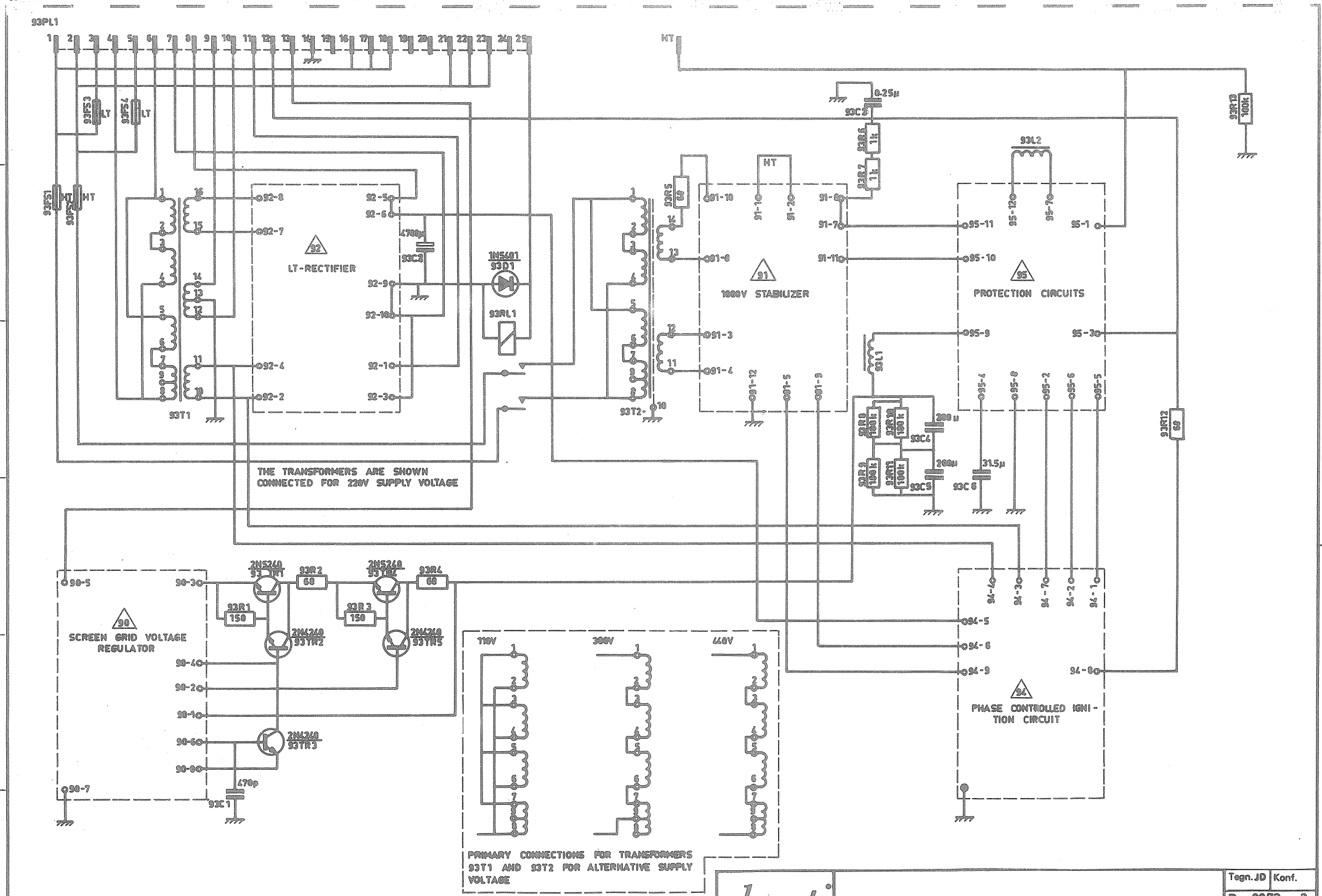

skanti

WIRING DIAGRAM FOR AC POWER PACK

Tegn. JD	Konf.
P - 0073 - 2	
19 - 10 - 71	

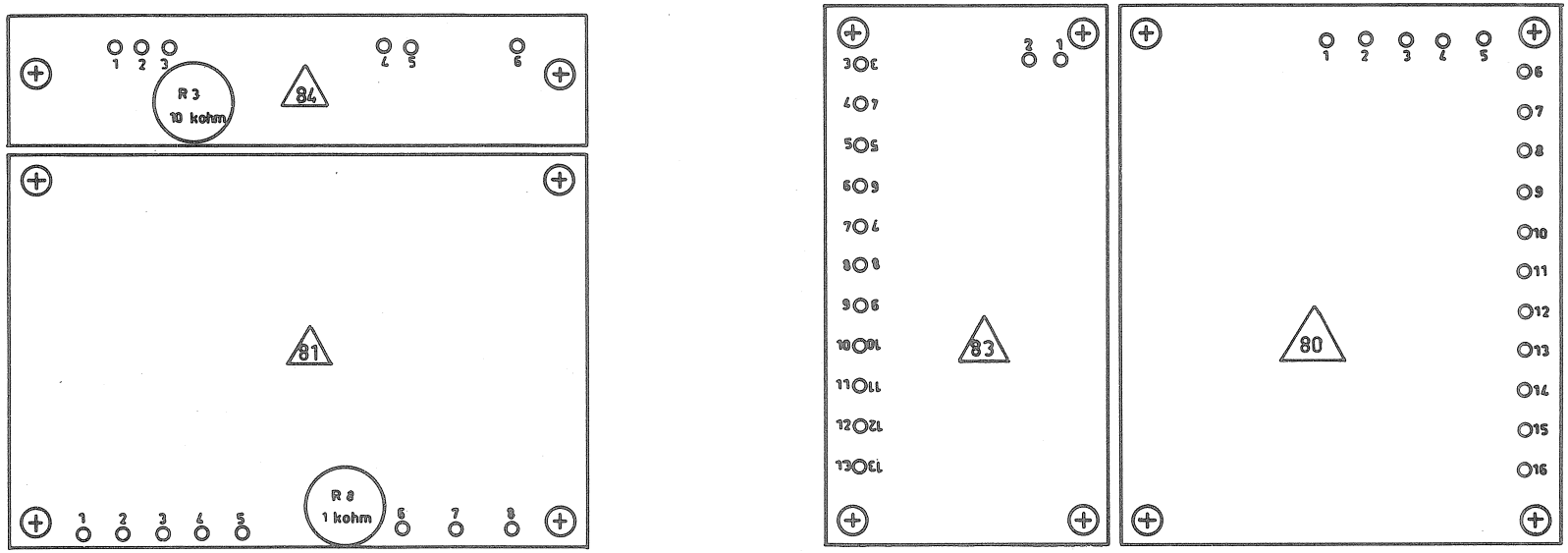

Materiale:	Overfladebeh.:	Tolerancer hvor intet andet er anført ± mm	Målforhold: 1 : 1
skanti	Top compartment DC Circuit board location plan		Tegn. JD / Konf. P - 0025 - 1 12 - 11 - 71

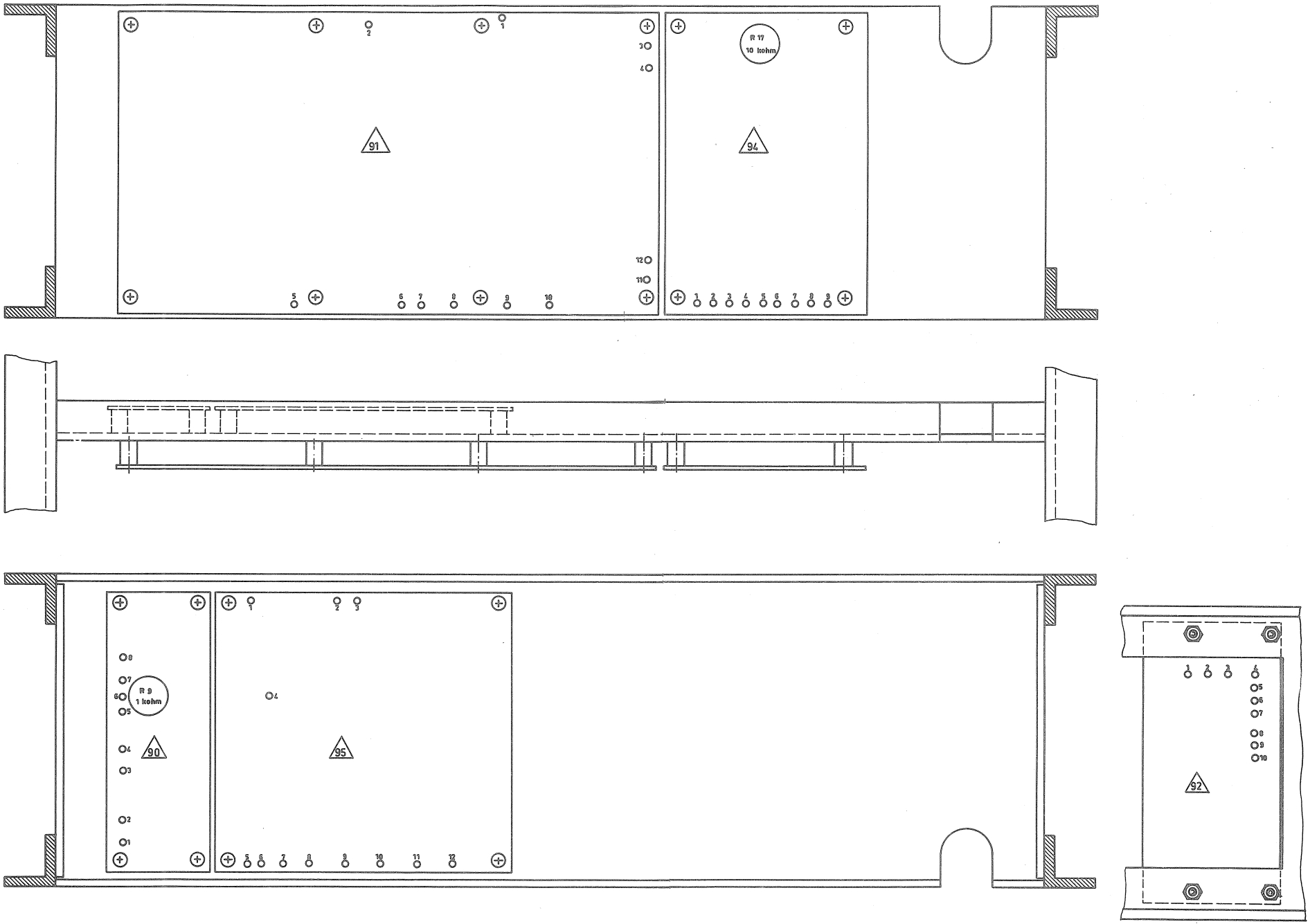

Materiale:	Overfladebeh.:	Tolerancer hvor intet andet er anført ± mm	Målforhold: 1:1
skanti	Top compartment AC Circuit board location plan		Tegn. JD Konf. P - 0024 - 1 15 - 11 - 71